Exercise:

(1) PWM in Stm32f407 for Motor Control

(2)Motor Encoder (Speed Monitoring)

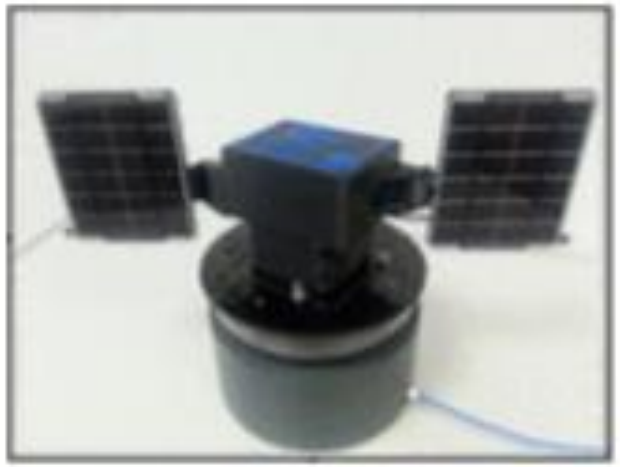

Energizer
9V

9V
5V

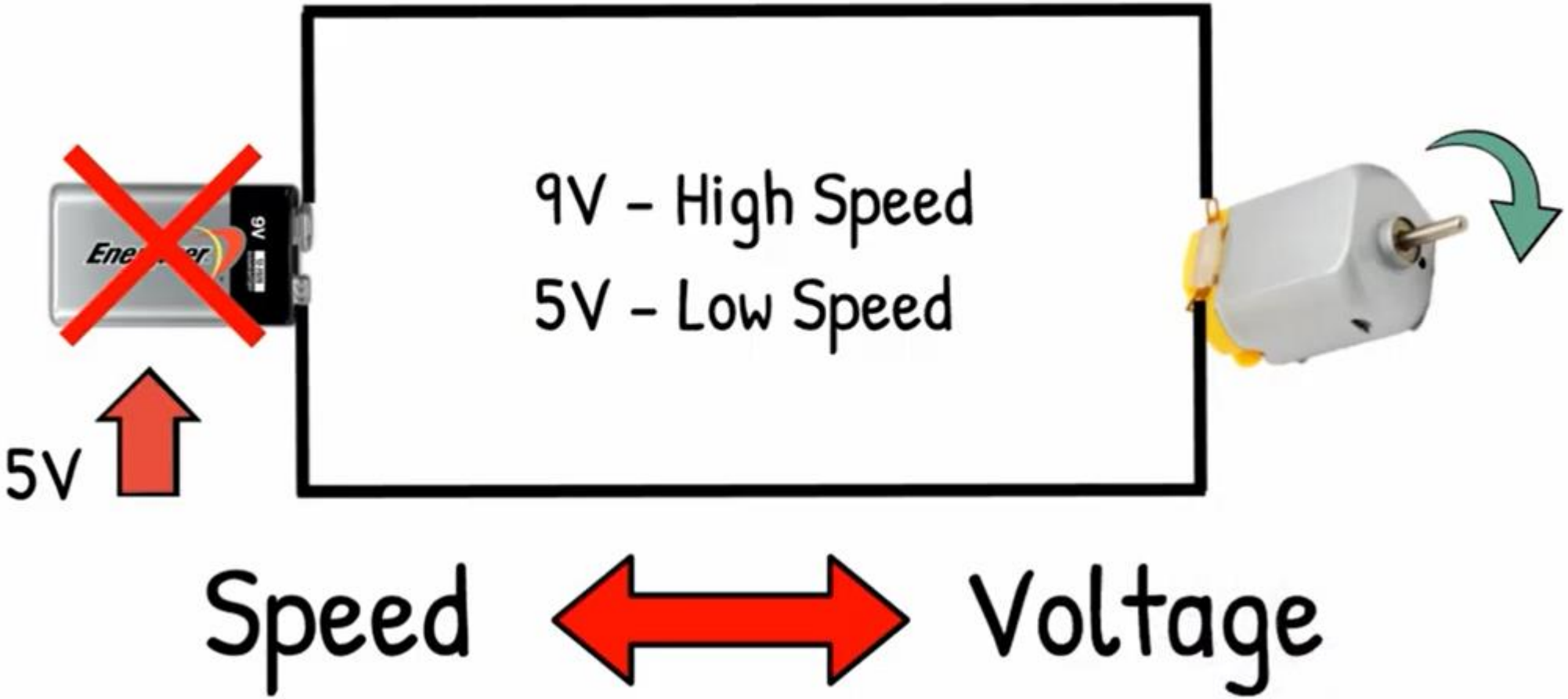
9V - High Speed
5V - Low Speed
5V
Speed
Voltage

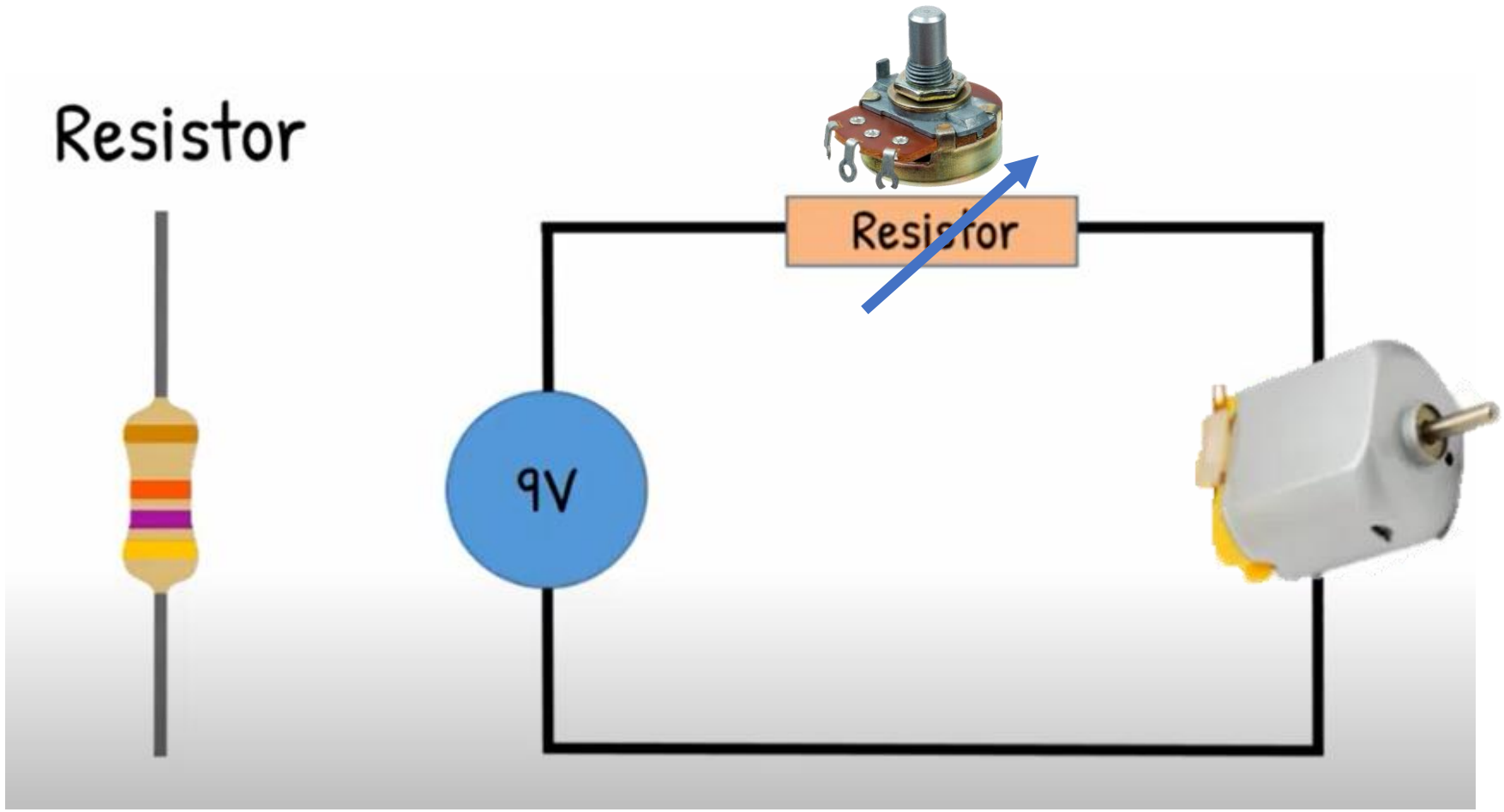
Resistor
Resistor
9V

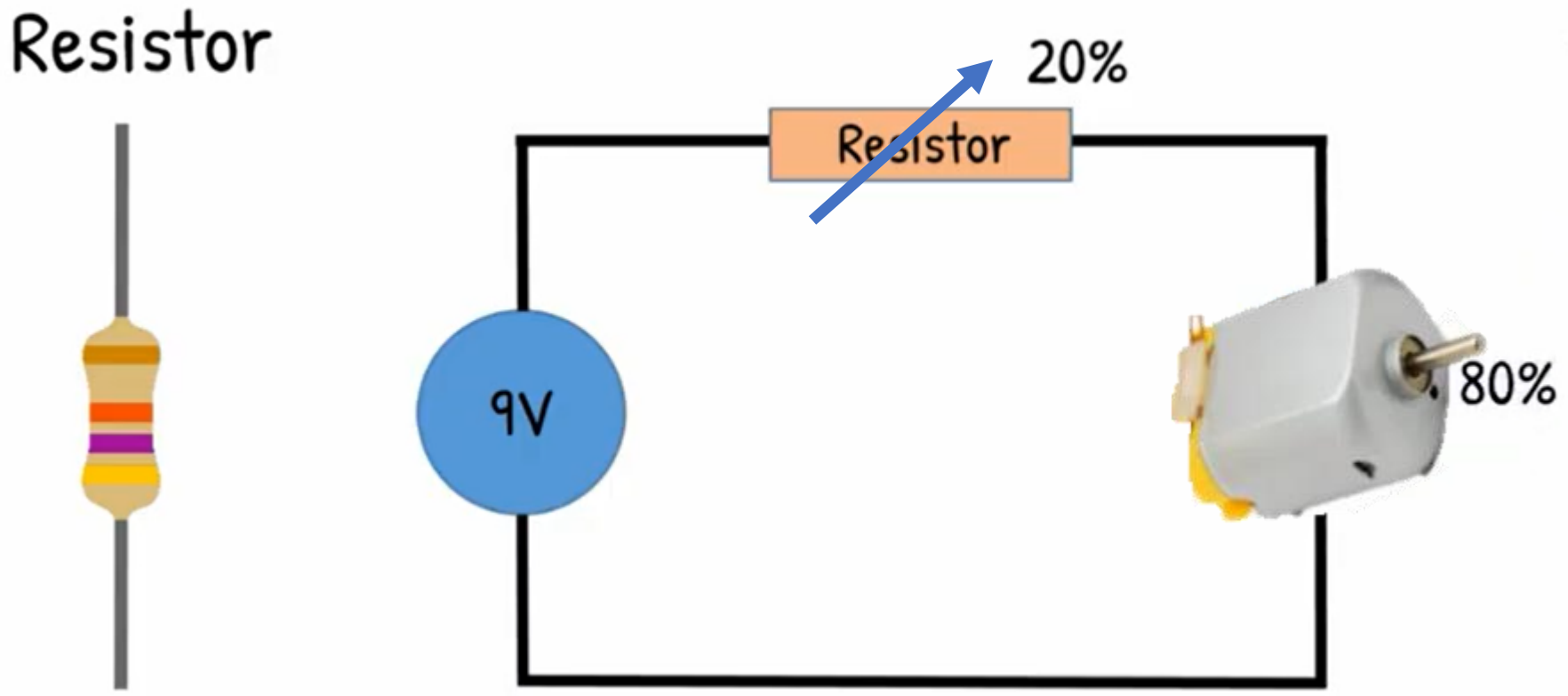
Resistor
20%
Resistor
9V
80%

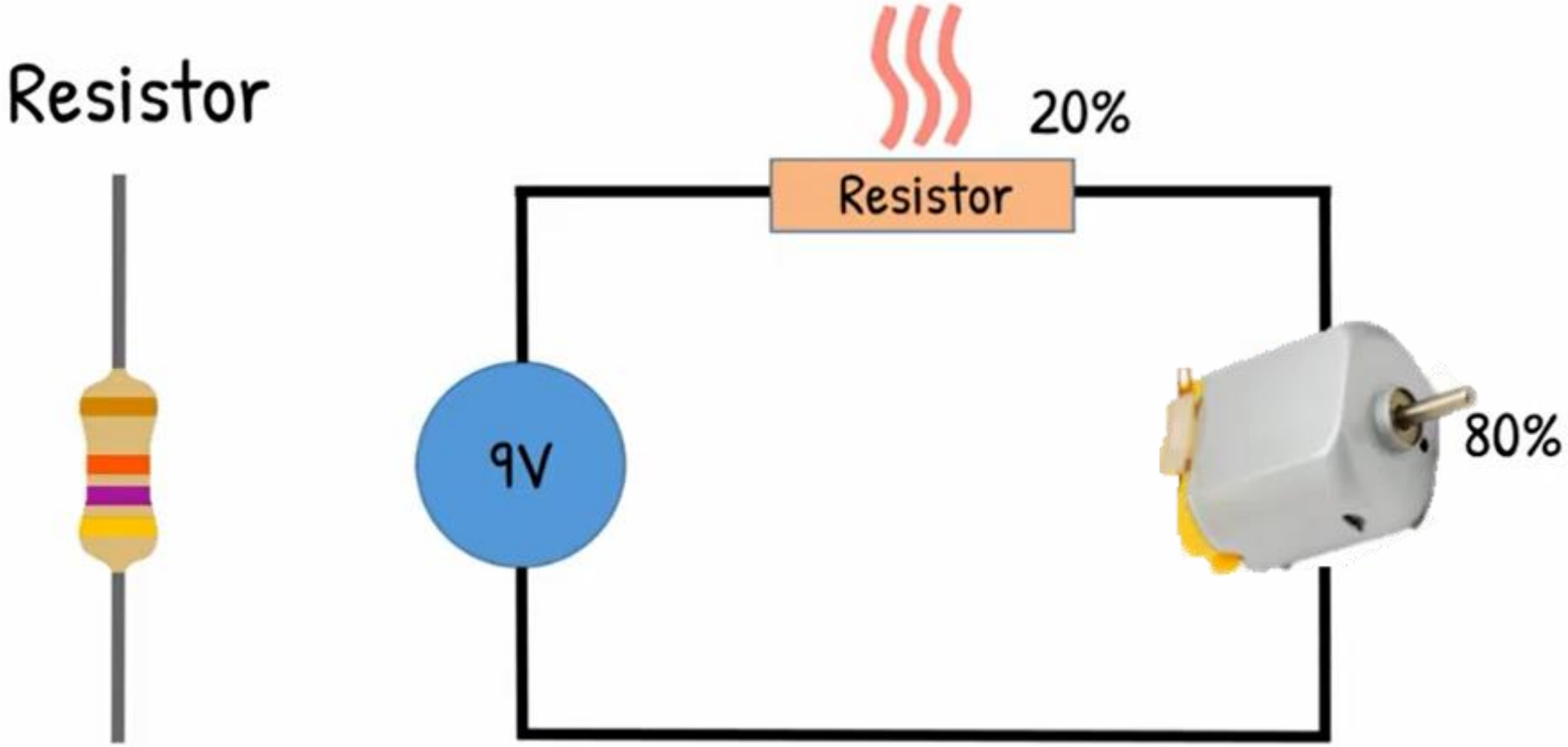
Resistor
20%
Resistor
9V
80%

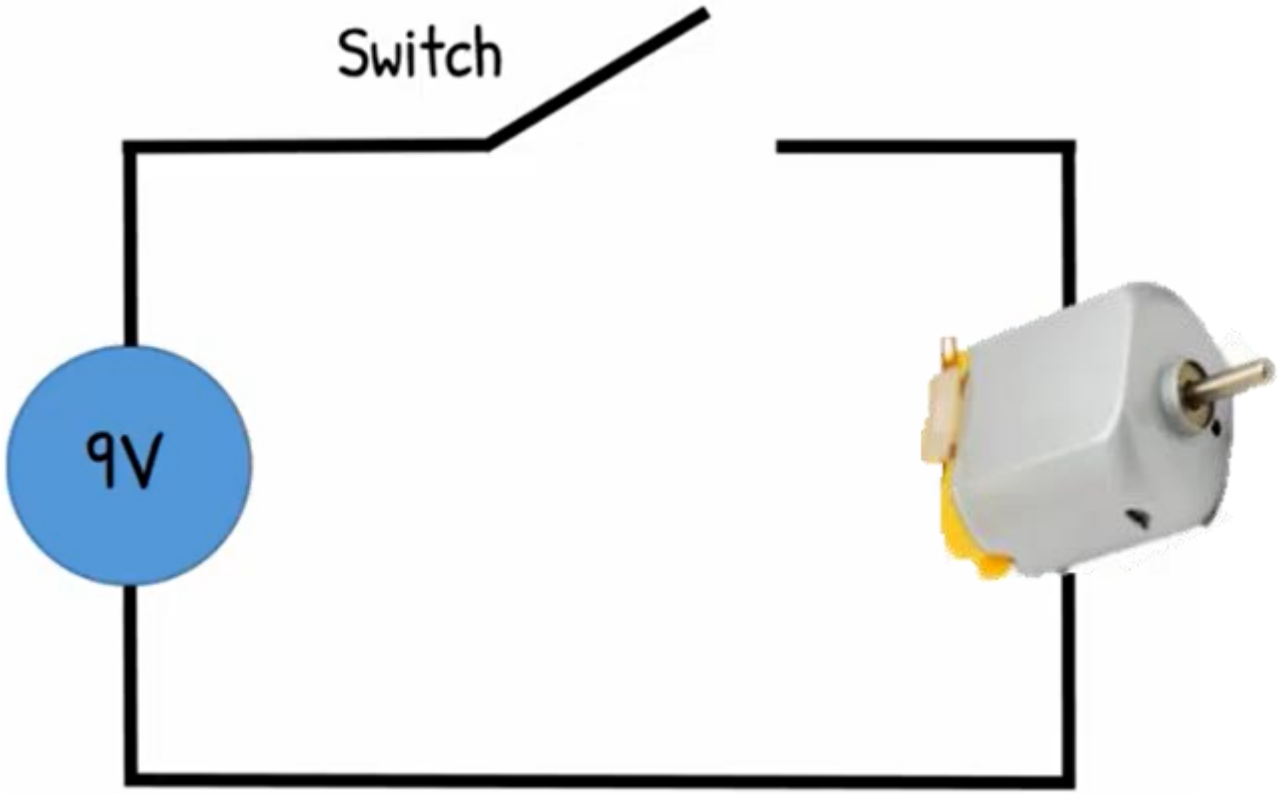
Switch
9V

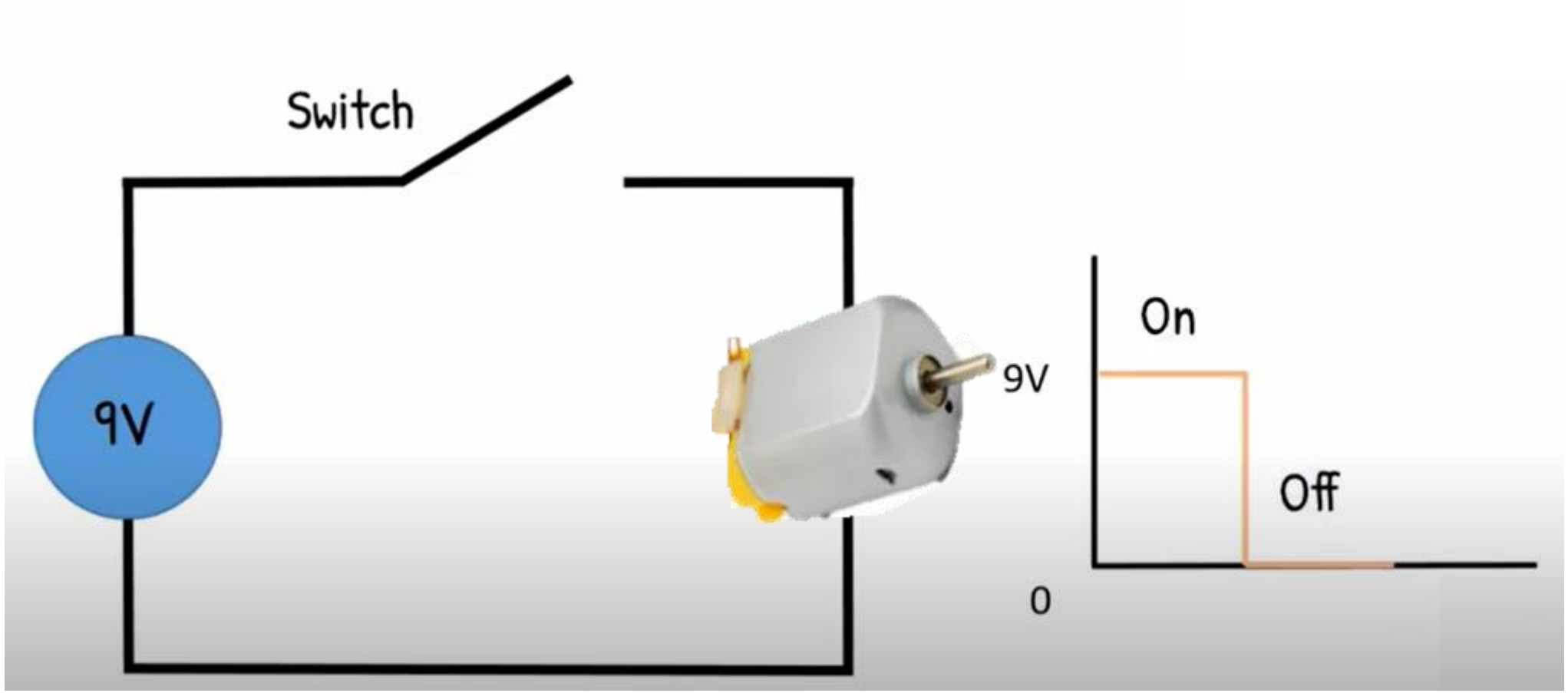
Switch
9V
9V
0
On
Off

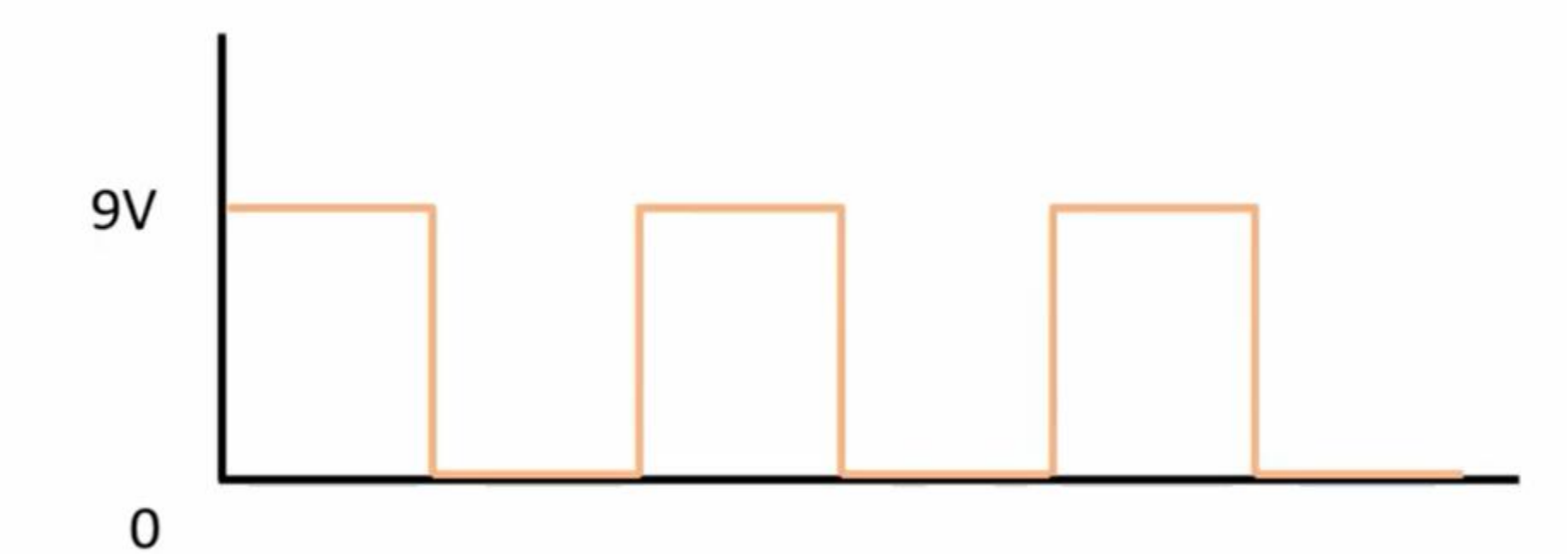
9V
0

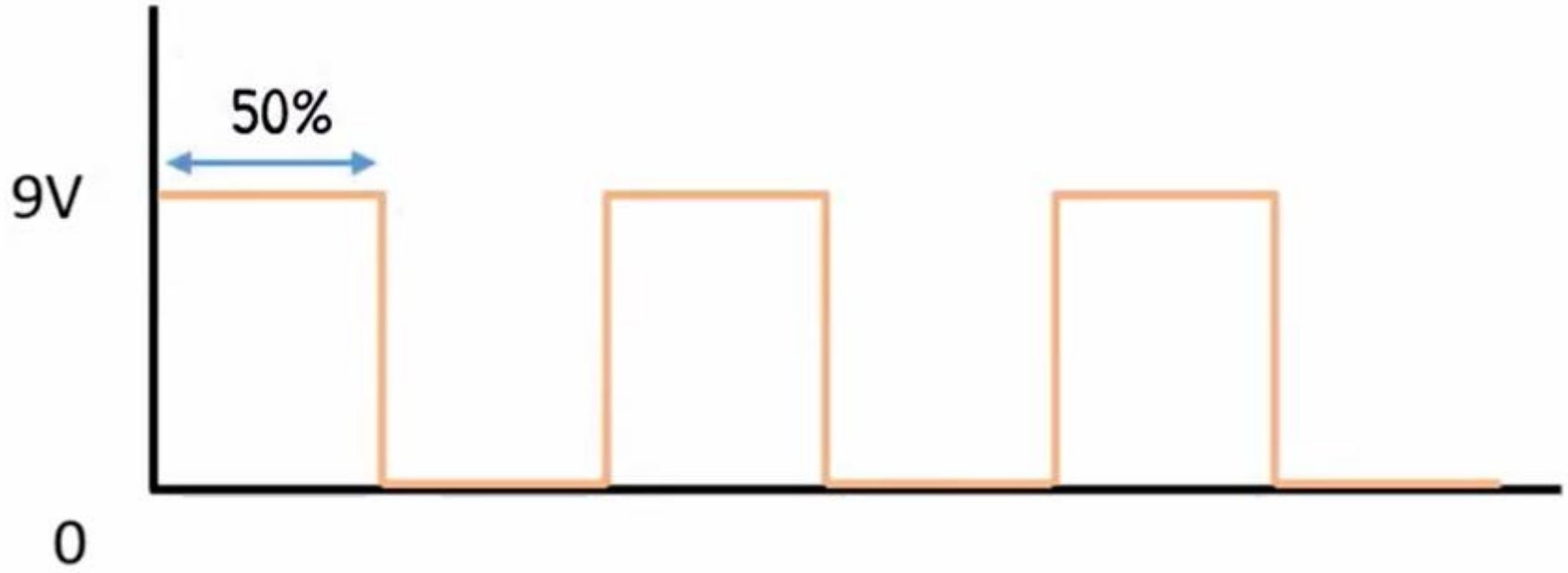
50%
9V
0

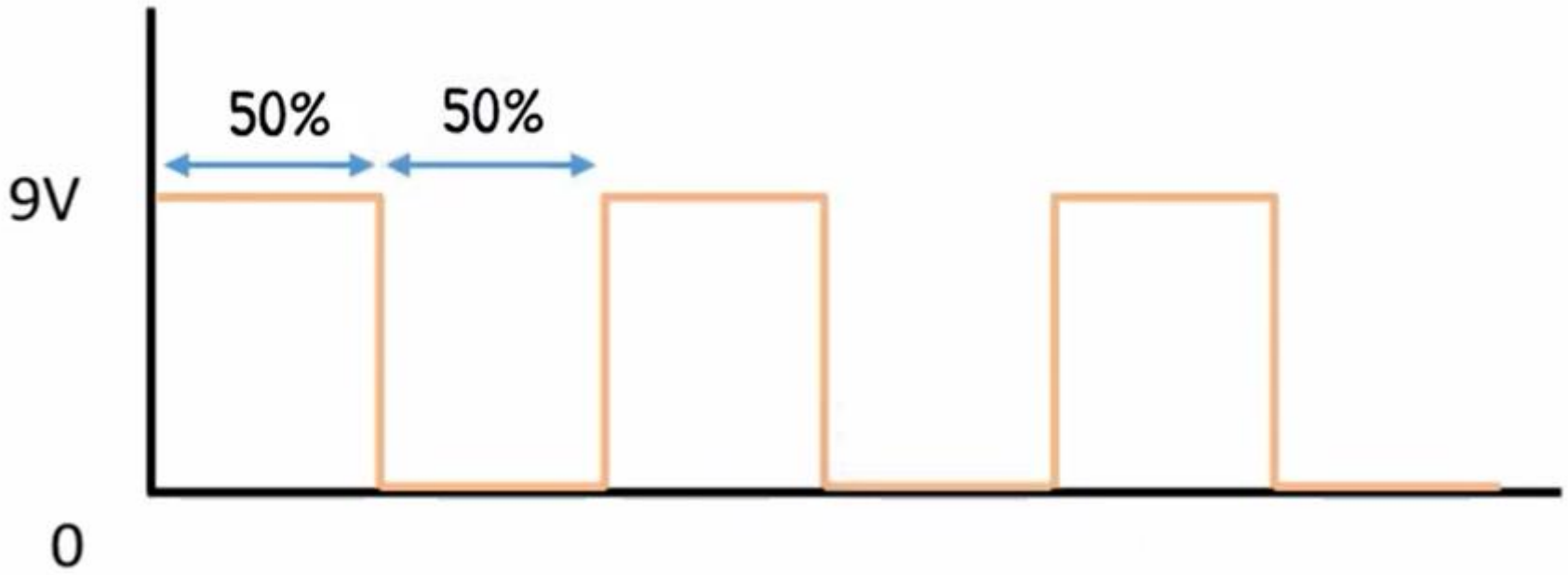
50%
50%
9V
0

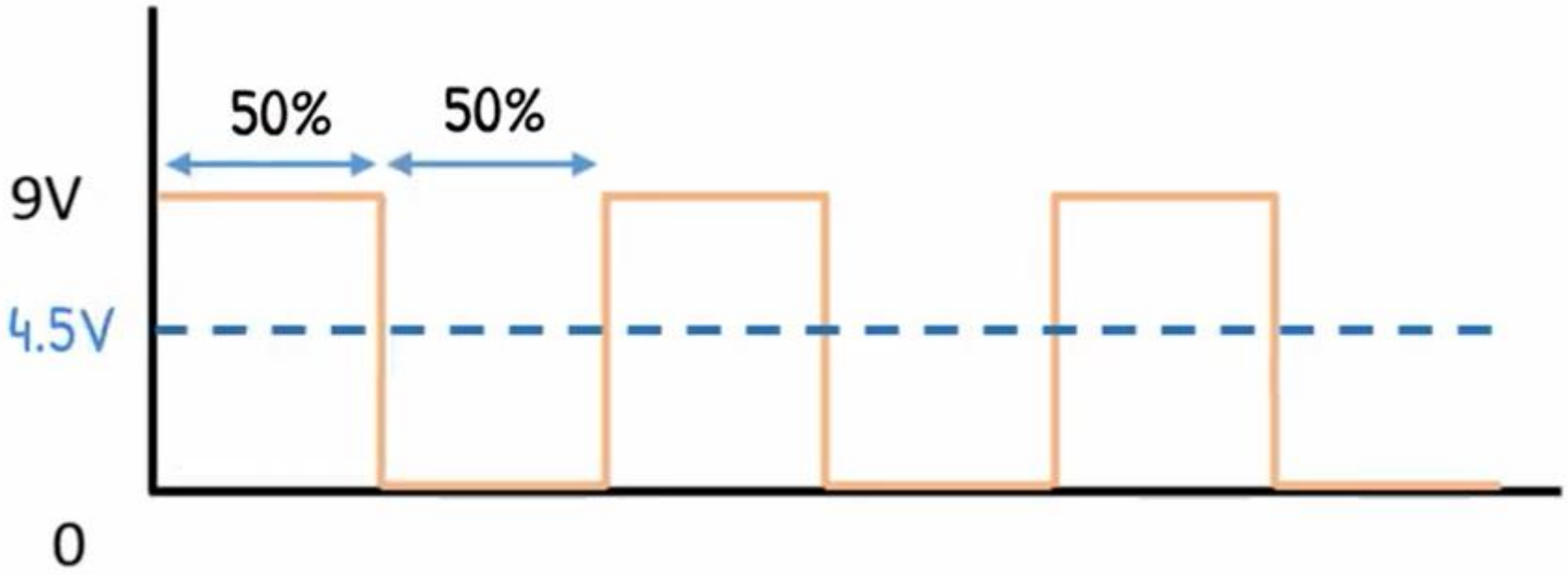
50%
50%
9V
4.5V
0

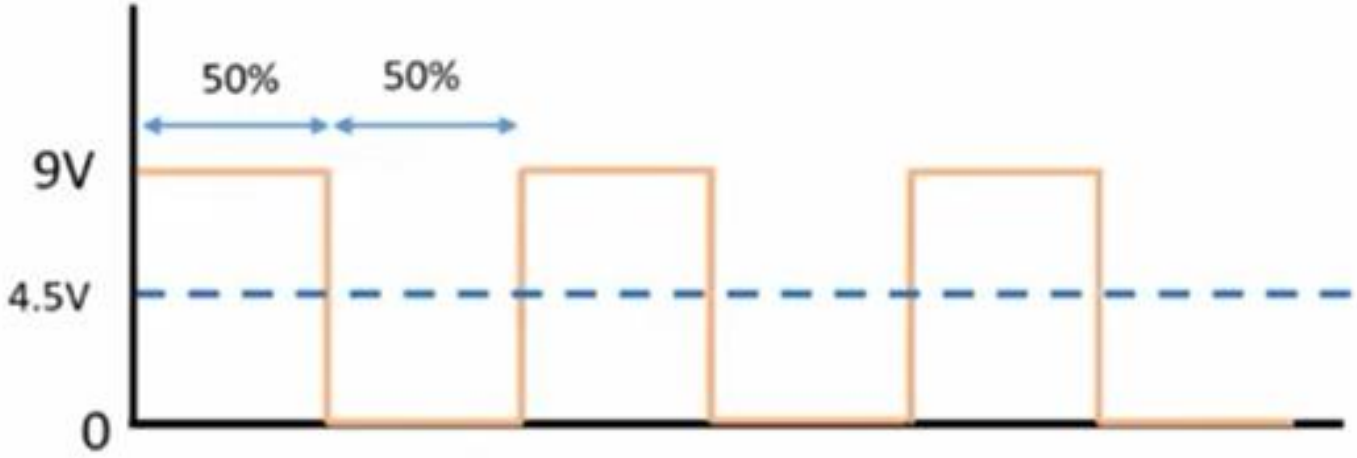

4.5V

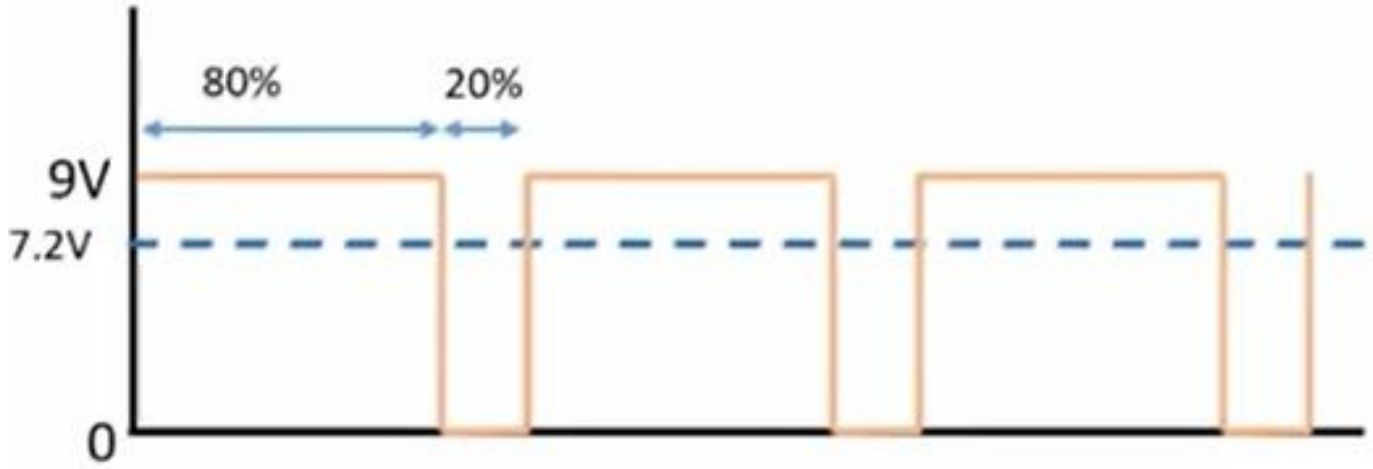

7.2V

Pulse Width Modulation

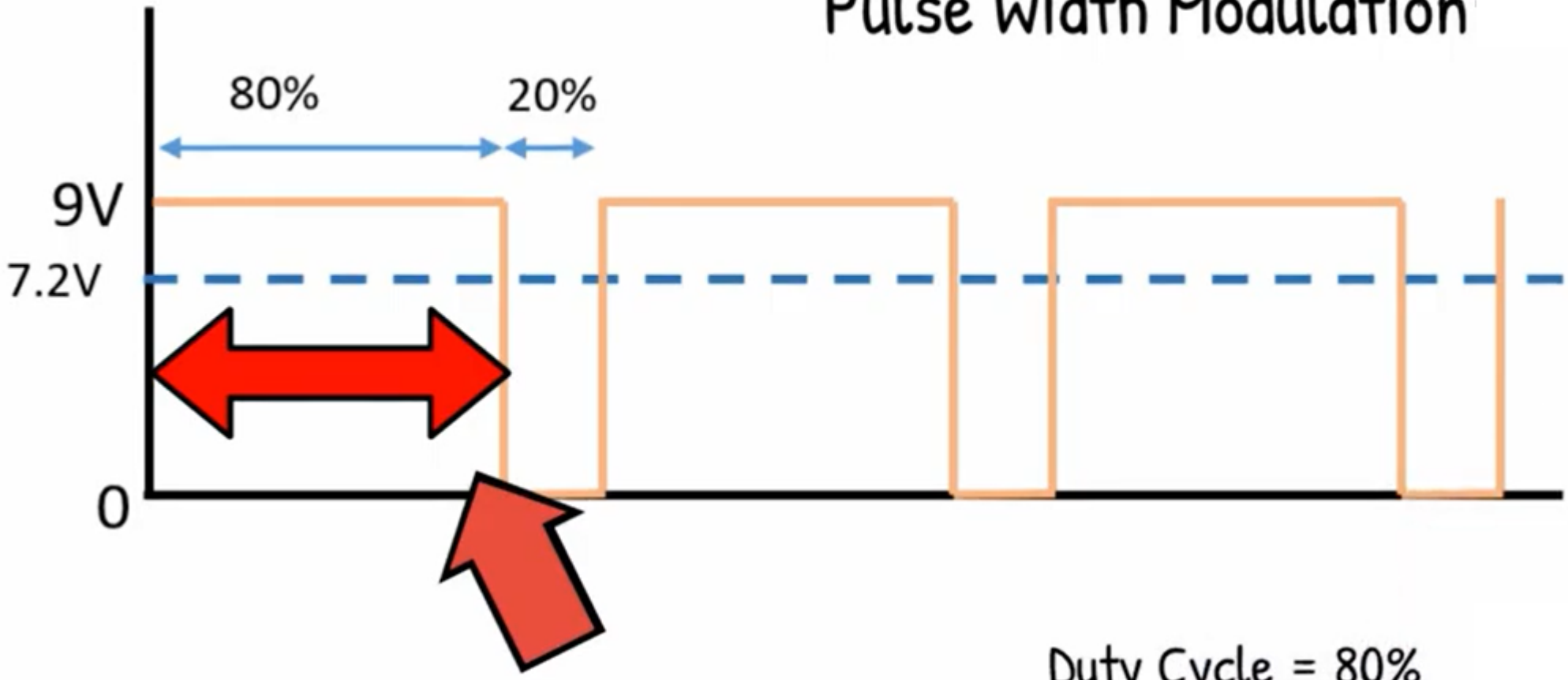

Duty Cycle = 80%

Pulse Width Modulation

- Pulse Width Modulation (PWM) uses digital signals to control power applications

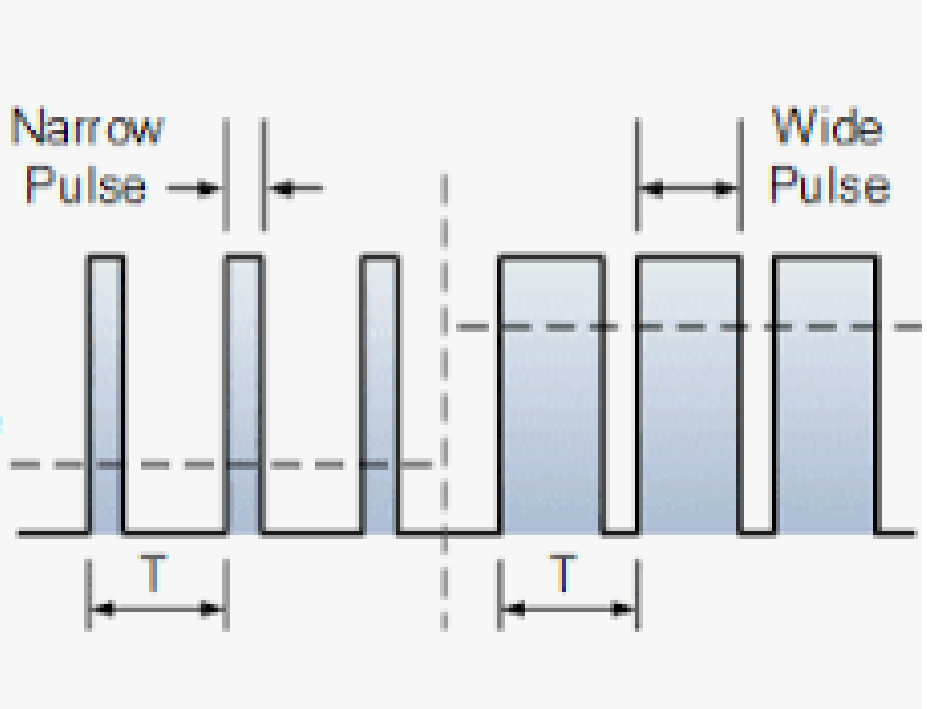

PWM

Pulse Width Modulation (PWM) is a fancy term for describing a type of digital signal. Pulse width modulation is used in a variety of applications including sophisticated control circuitry.

Pulse-width modulation (PWM), as it applies to motor control, is a way of delivering energy through a succession of pulses rather than a continuously varying (analog) signal

PWM

Applications

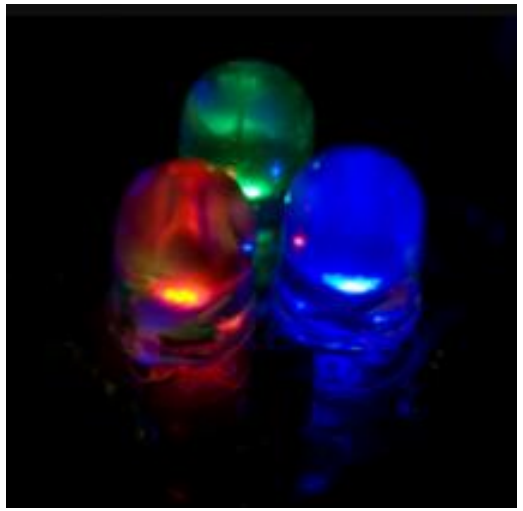

PWM

- Led Brightness

Examples
You can control the brightness of an LED by adjusting the duty cycle.

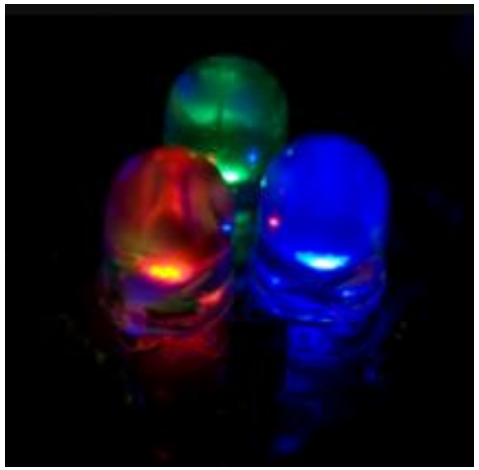

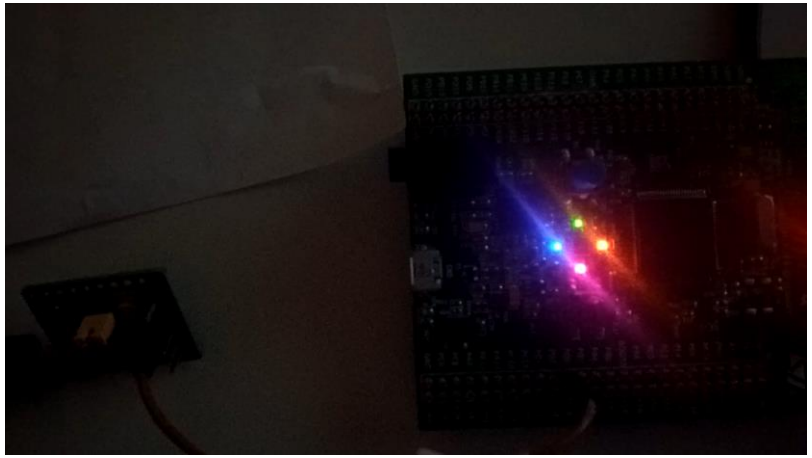

PWM

Duty Cycle

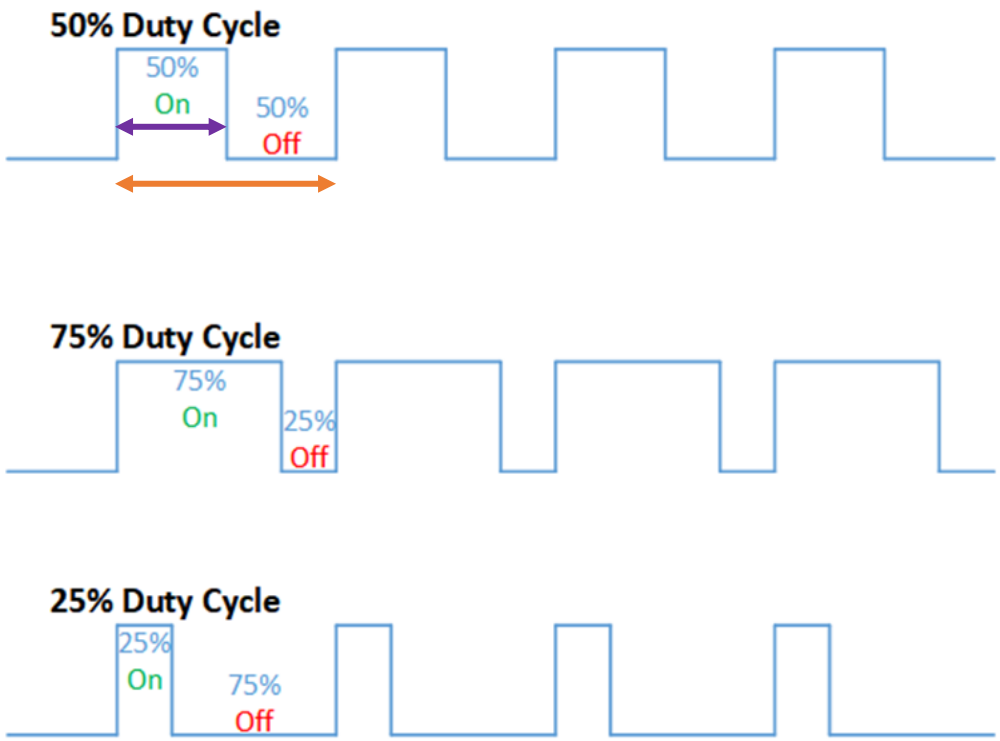

$$Duty_cycle = \frac{On_time}{Total_time_of_one_pulse} * 100 \quad \%$$

PWM

https://www.youtube.com/watch?v=GQLED3gmONg&ab_channel=SimplyElectronics

PWM

- The most popular application is motor speed control. Motors as a class require very high currents to operate.

- Being able to vary their speed with PWM increases the efficiency of the total system by quite a bit.

PWM

Not consuming extra power is one reason,
 it's easy to control the motor with PWM from, say, a microcontroller unit; just code a counter for generate the PWM and connect the output to a motor drive (which gives the real power to the motor, and also gives the advantage of having control and power separated).

Timer: Clock

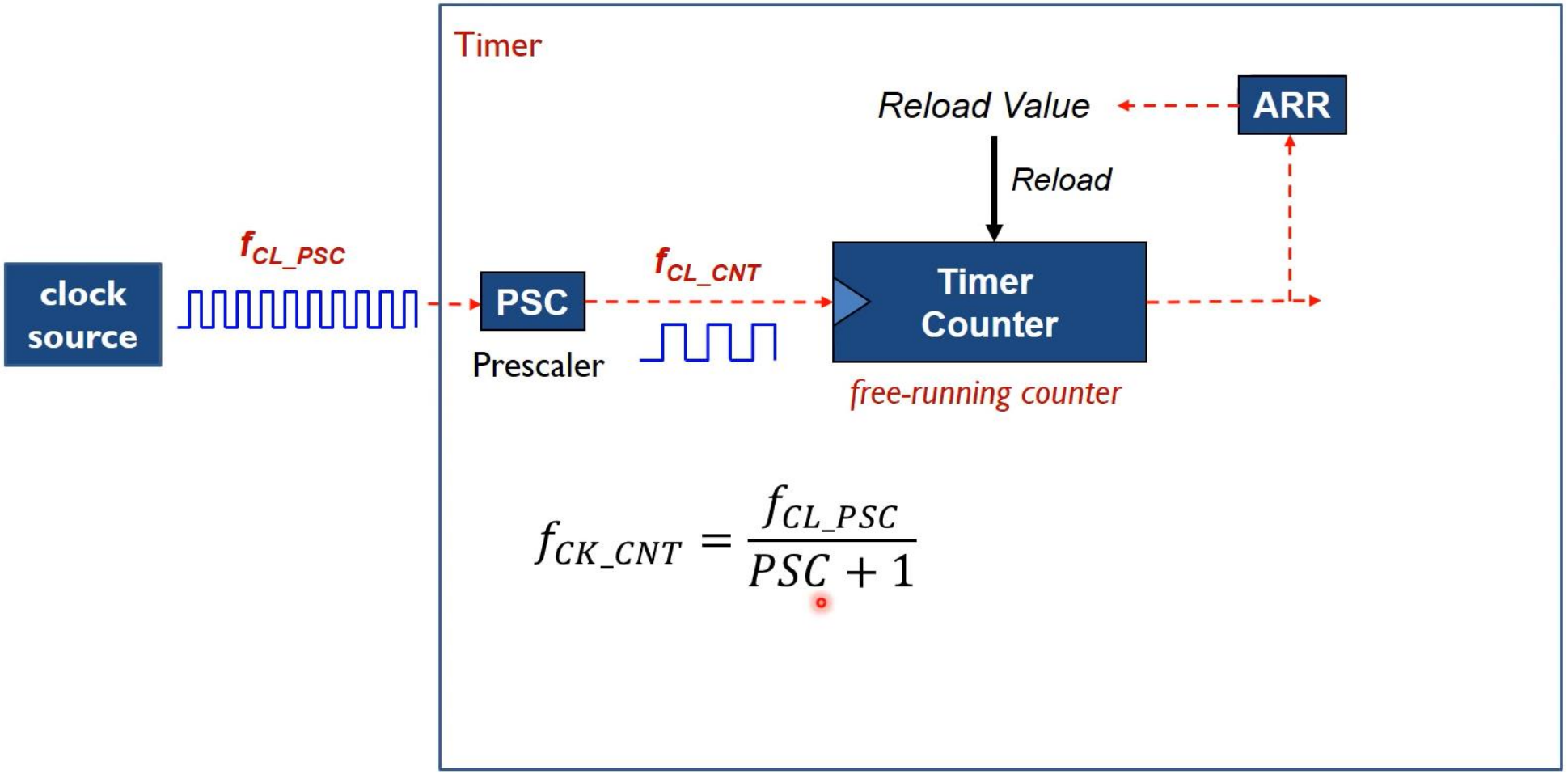

$$f_{CK_CNT} = \frac{f_{CL_PSC}}{PSC + 1}$$

Timer: Output

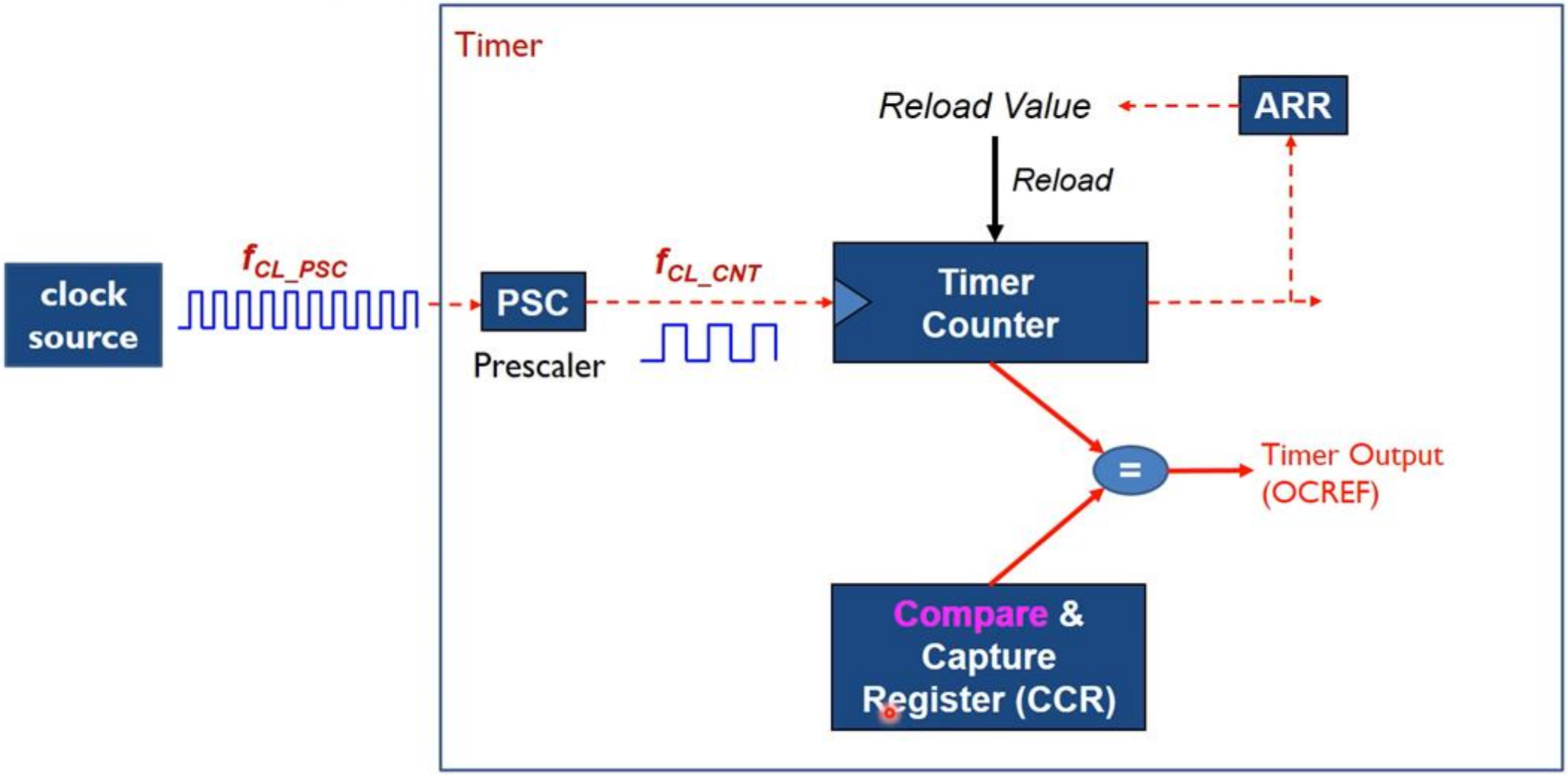

Timer: Input Capture

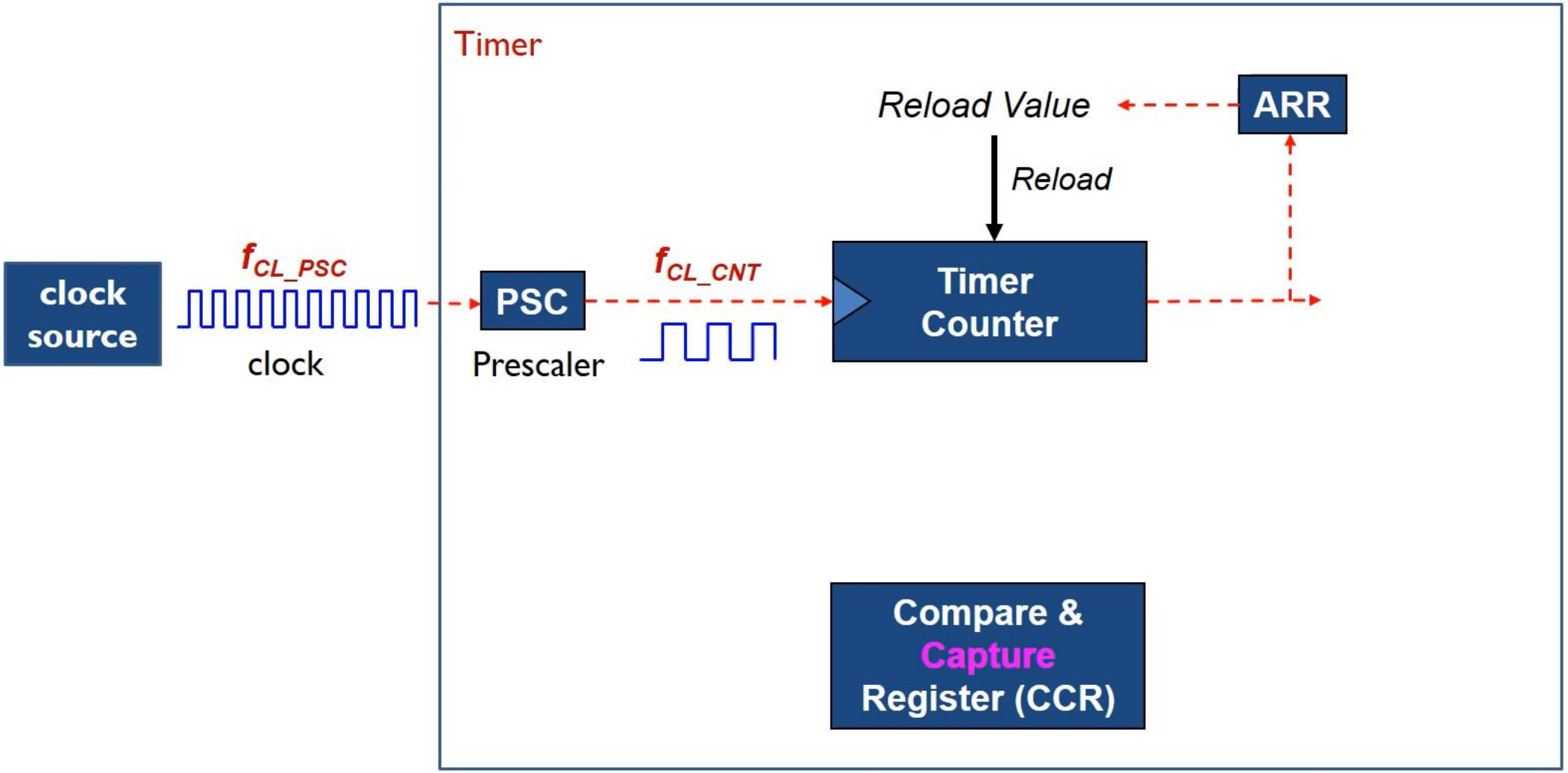

A timer can also be used for input capture.

Up-counting Mode

ARR = 6, RCR = 0

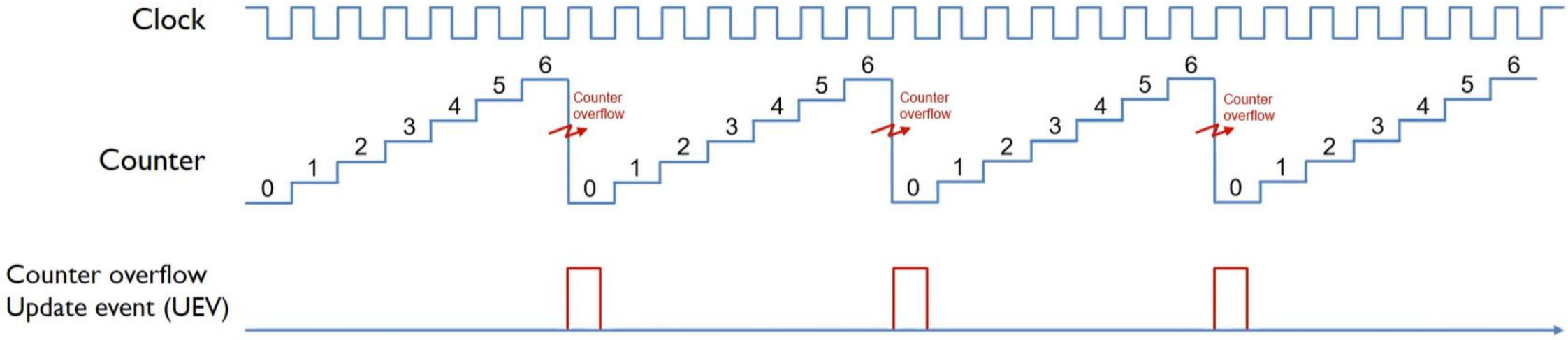

value.

Router Design for....odt
Router Design for....odt
Router Design for....odt
20210303_101720.jpg
Show all

PWM

- The STM32 hardware timers are separate hardware blocks that can count from 0 to a given value triggering some events in between.

- In the PWM mode the timer controls the output of 1 or more output channels.

- When the counter value reaches 0, maximum or a compare value defined for each channel, the output value of the channel can be changed as shown below:

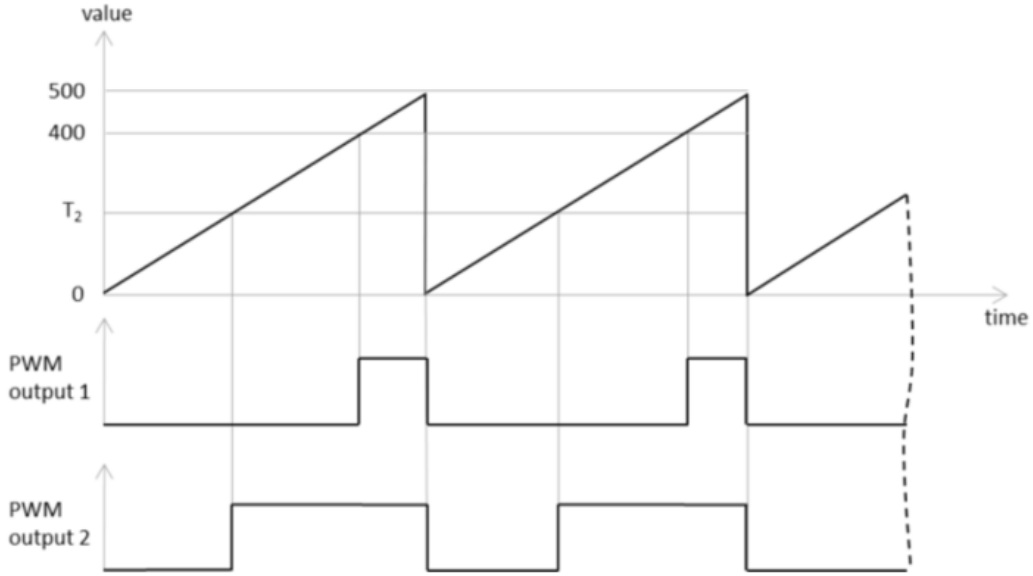

Exercise: Task1

Motor Interface with Microcontrollers

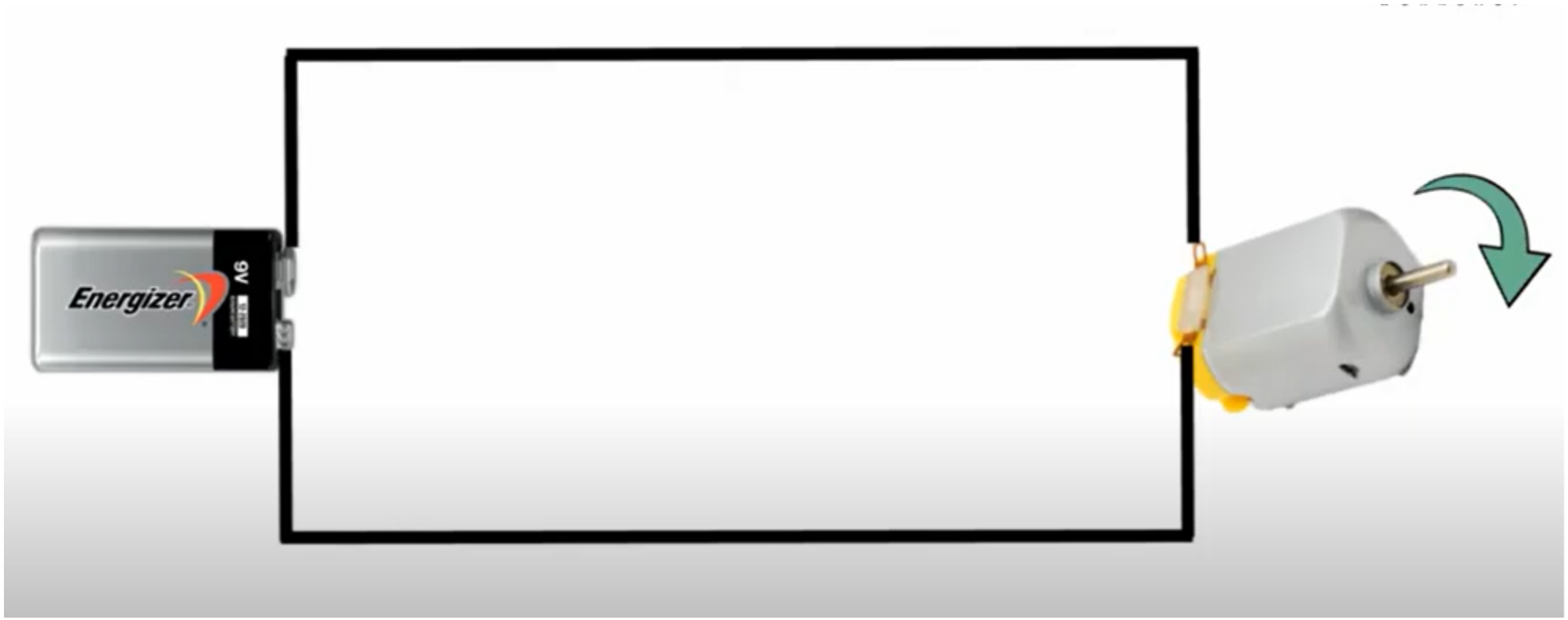

Motor Interface with Microcontrollers

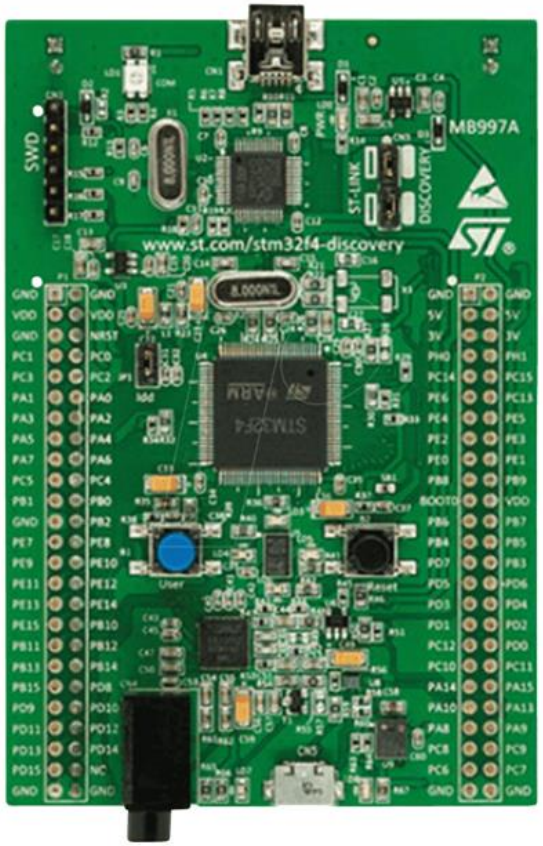

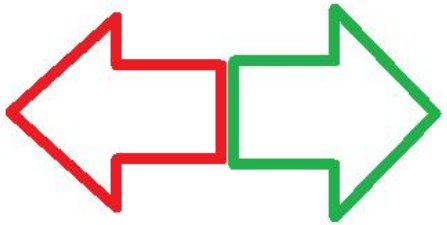

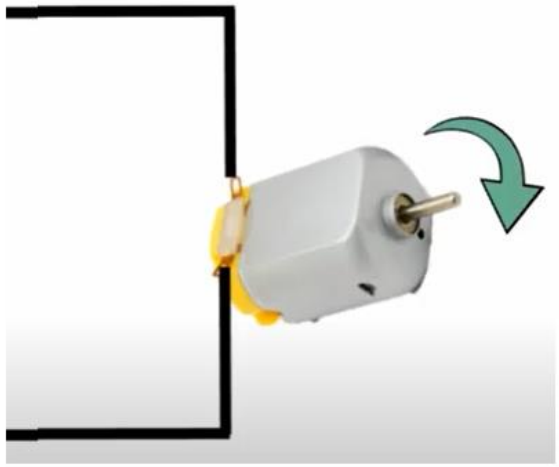

Motor Interface with Microcontrollers

The main reason is that the Microcontrollers can only handle supplying a small amount of power and most motors would draw more power than the Microcontrollers can supply.

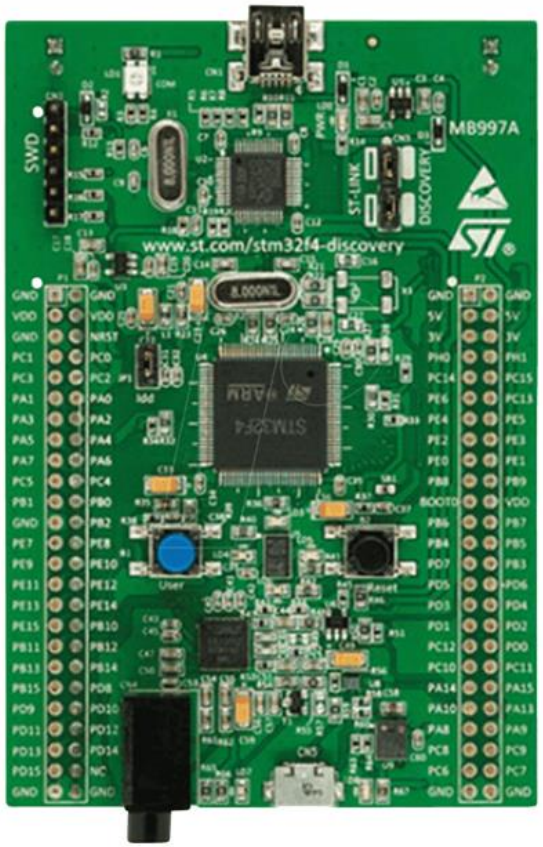

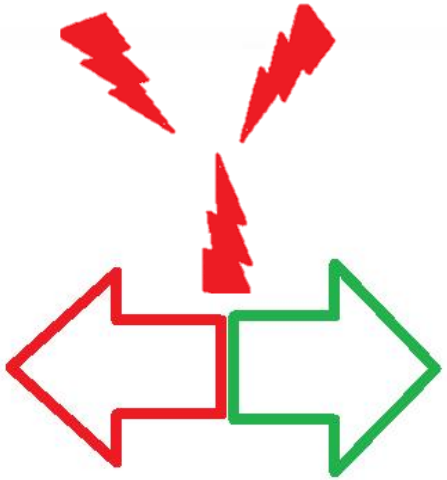

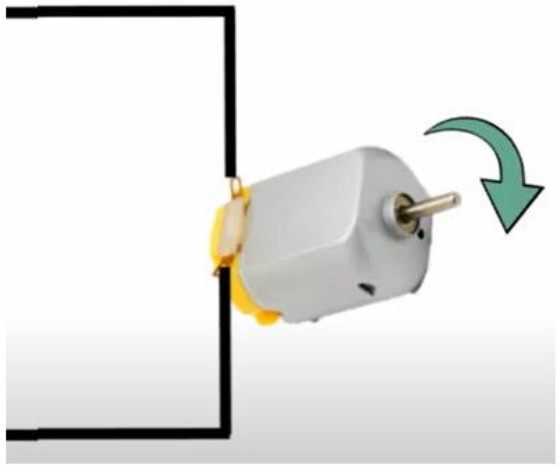

Motor Interface with Microcontrollers

H-Bridge

By using the H-Bridge, you supply the power for the motor(s) from an external power source so you do not put any strain on the Microcontrollers 's power supply.

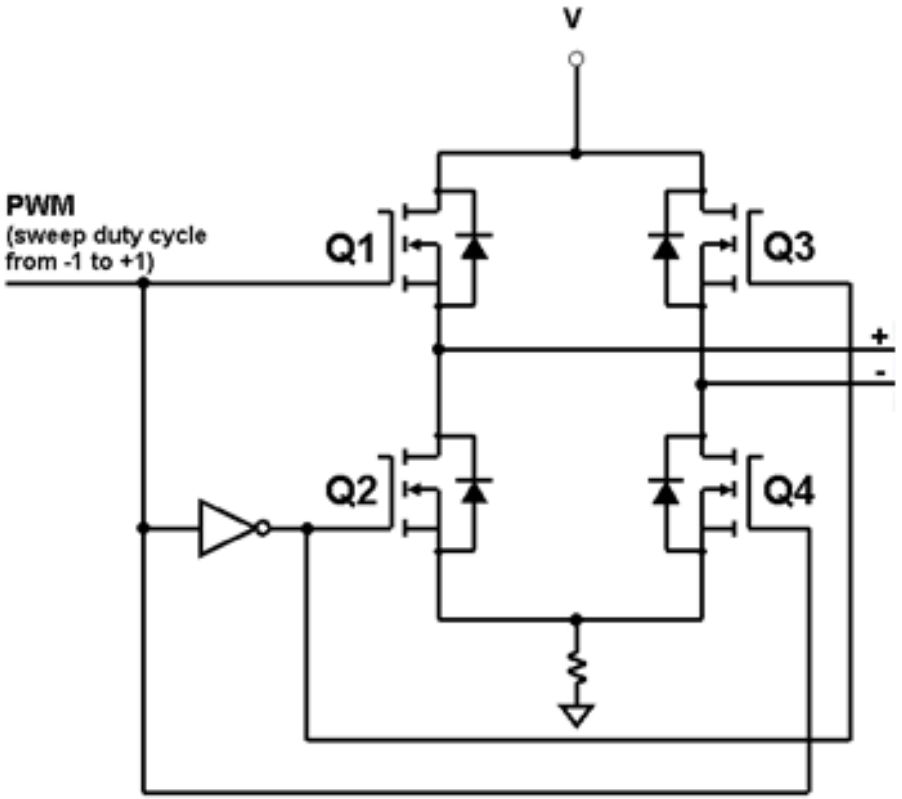

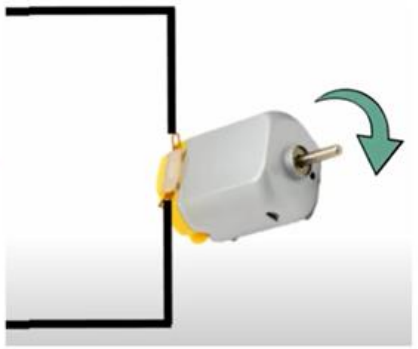

PWM

H-Bridge

- PWM is often used in conjunction with an H-Bridge.
- An **H-bridge** is an electronic circuit that switches the polarity of a voltage applied to a load.
- In the case of inductive loads, such as motors, diodes are used to suppress inductive spikes, which may damage the transistors.

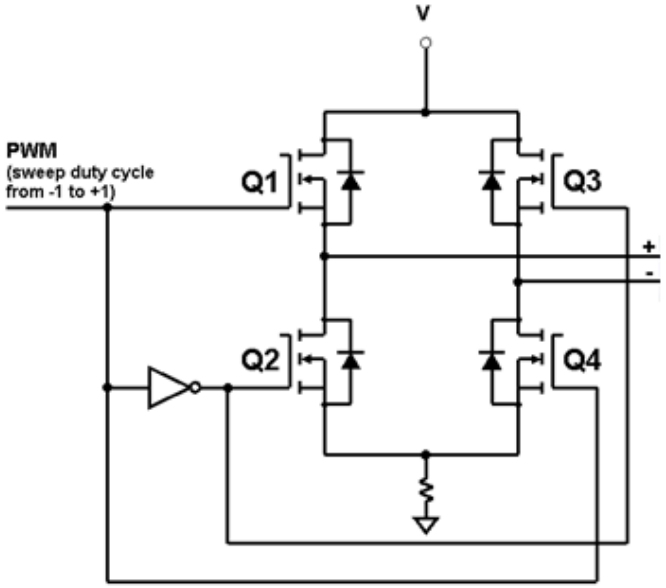

PWM

- This configuration is so named because it resembles the letter H, and allows the effective voltage across the load to be doubled since the power supply can be switched across both sides of the load.

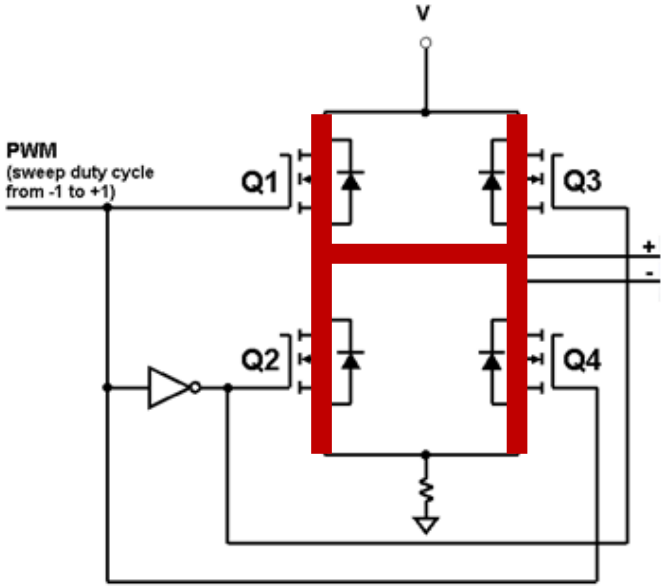

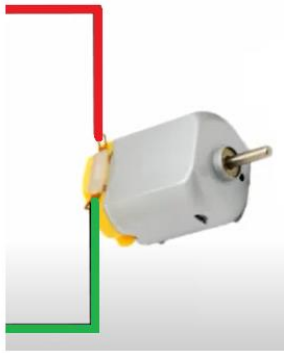

PWM

When the switches S1 and S4 (according to the first figure) are closed (and S2 and S3 are open) a positive voltage is applied across the motor.

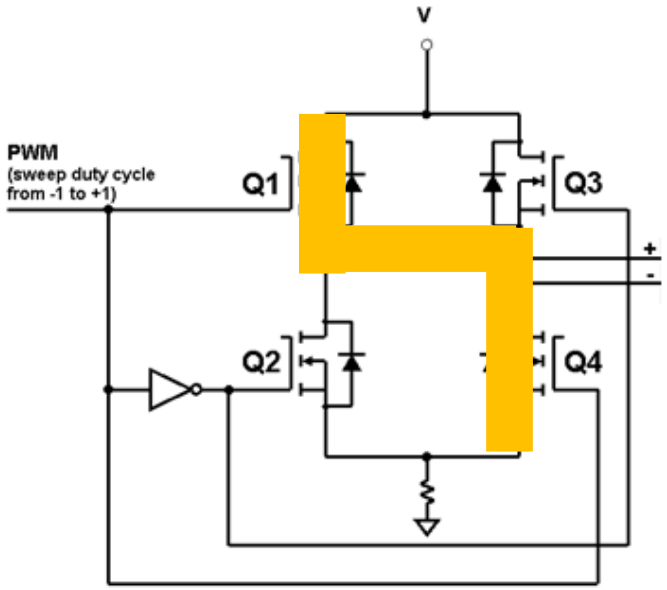

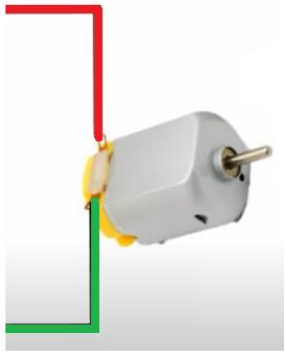

PWM

By opening S1 and S4 switches and closing S2 and S3 switches, this voltage is reversed, allowing reverse operation of the motor.

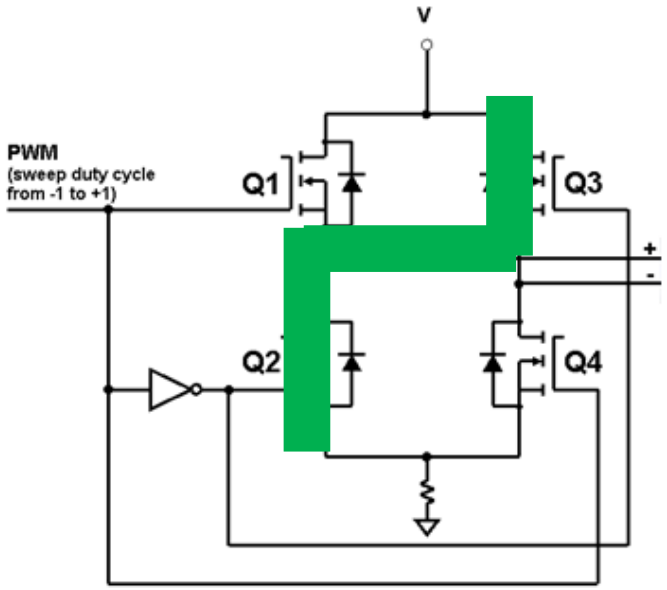

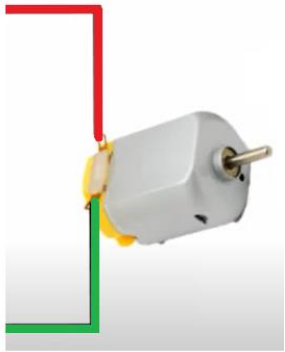

Brushed DC Motor Interface

Automotive fully integrated
H-bridge motor driver

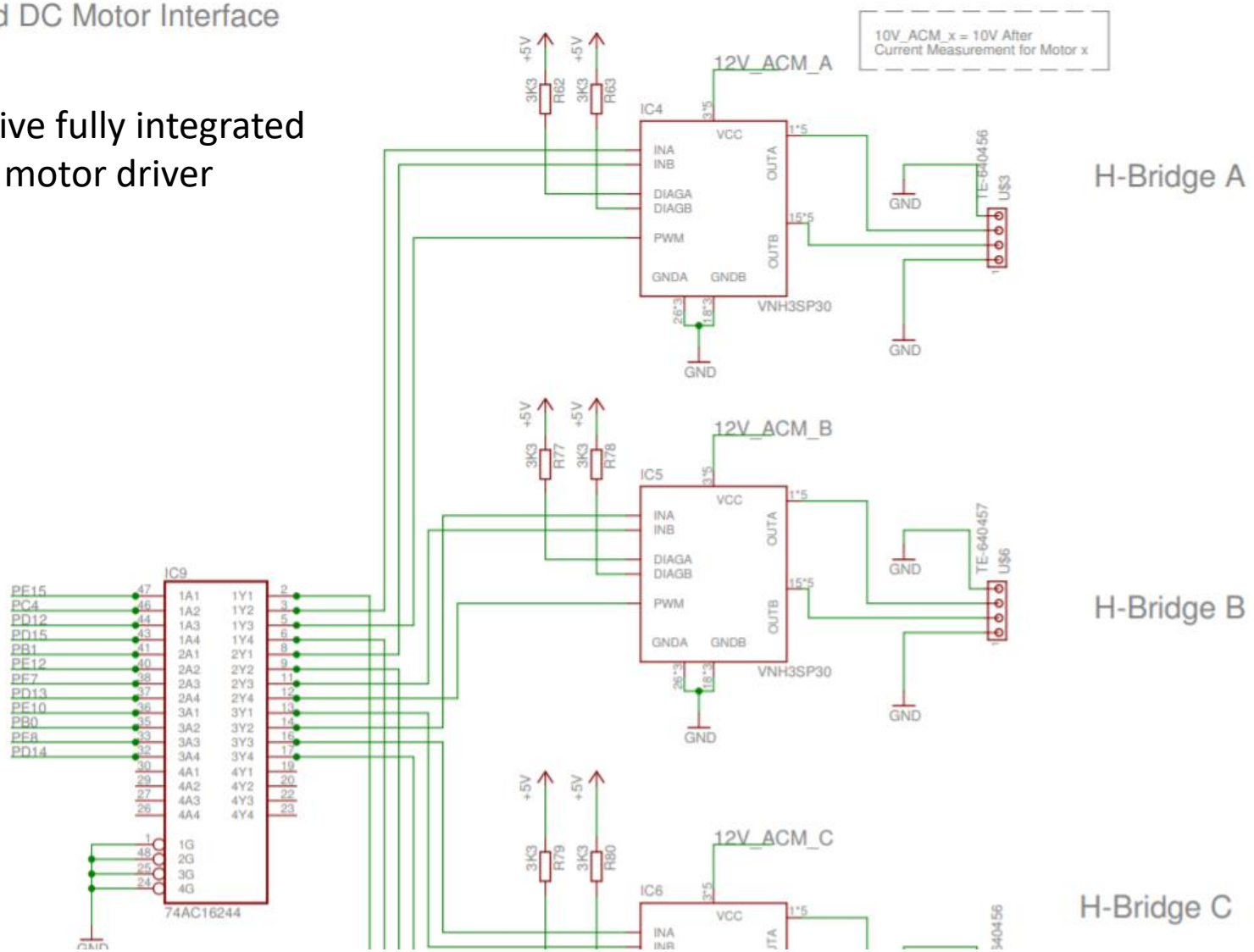

Exercise: Task2

Motor Encoder

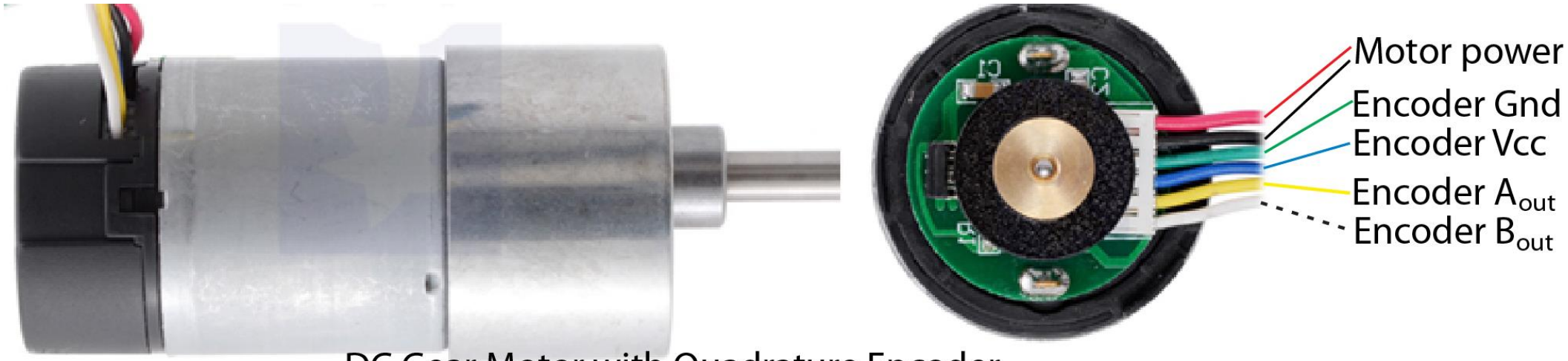

DC Gear Motor with Quadrature Encoder

Rotary Encoders

How To Mechatronics
www.HowToMechatronics.com

Exercise: Task3